Ocean Color Experiment Ver. 2 (OCE2)

~ Concept Presentations~

Mechanical Systems

Ed Aguayo
Dave Palace

April 27, 2011

Do not distribute this material without permission
from the Scientific Point of Contact Jay Smith (James.C.Smith@nasa.gov)
or the Programmatic Point of Contact Angela Mason (Angela.J.Mason@nasa.gov)
This document contains sensitive information and is intended for NASA Official Use Only

Mechanical Systems Work

- **Using the design from GOCECP as a baseline template**
- **Three Main Assemblies**
  - Scan Drum And Assembly Mechanism—Telescope, optics, and mechanism that spins the telescope
  - Aft Optics/Detector Assembly—Detectors, Fiber Optics
  - Cradle Assembly—Tilting Mechanism, calibrating mechanism, I/F to Spacecraft
- **Main structural Materials used**
  - Al 6061-T6
  - Aluminum Honeycomb

Use or disclosure of this data is subject to the restriction on the title page of this document

Instrument Packaging Overview

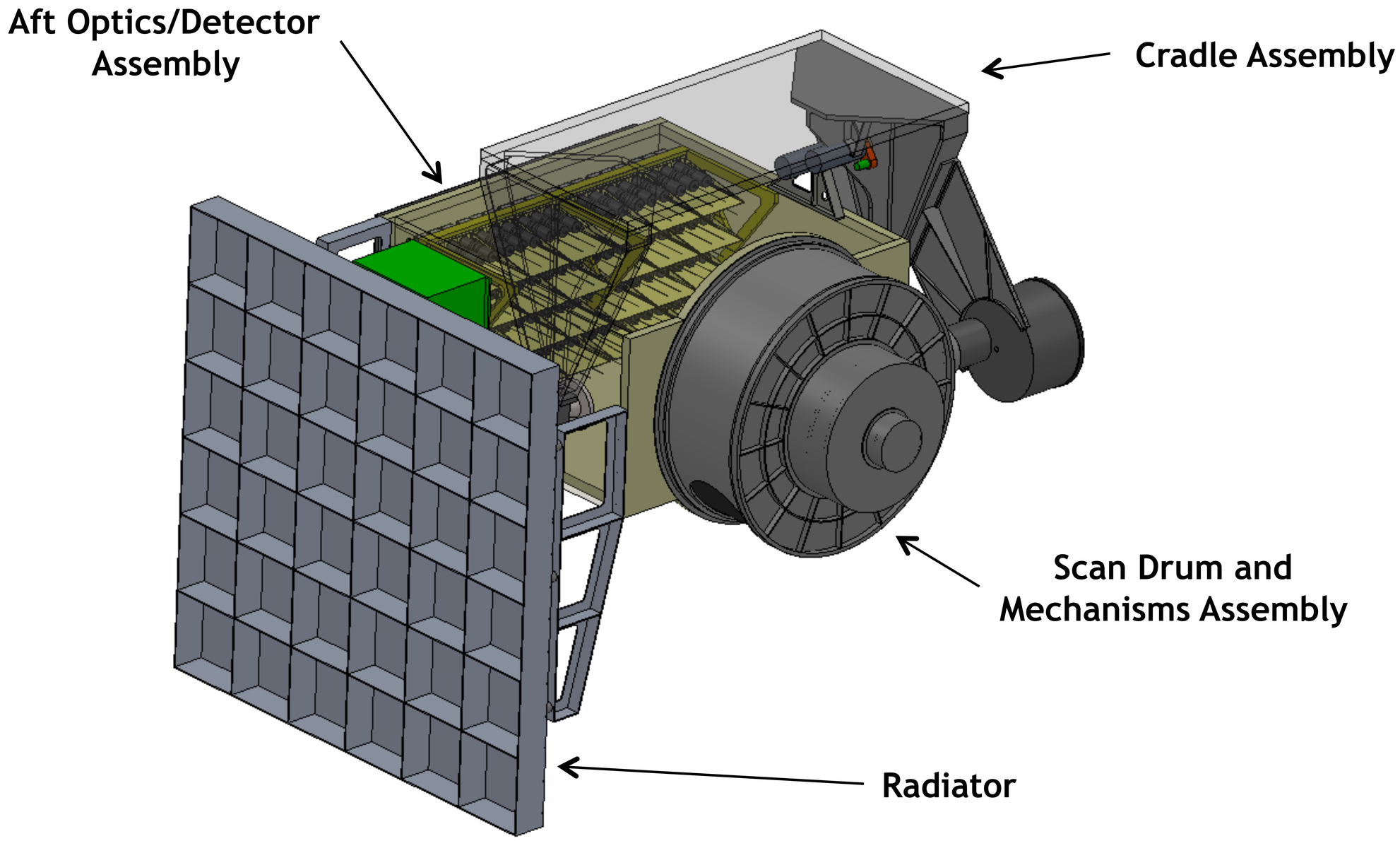

Use or disclosure of this data is subject to the restriction on the title page of this document

Scan Drum and Mechanism Assembly

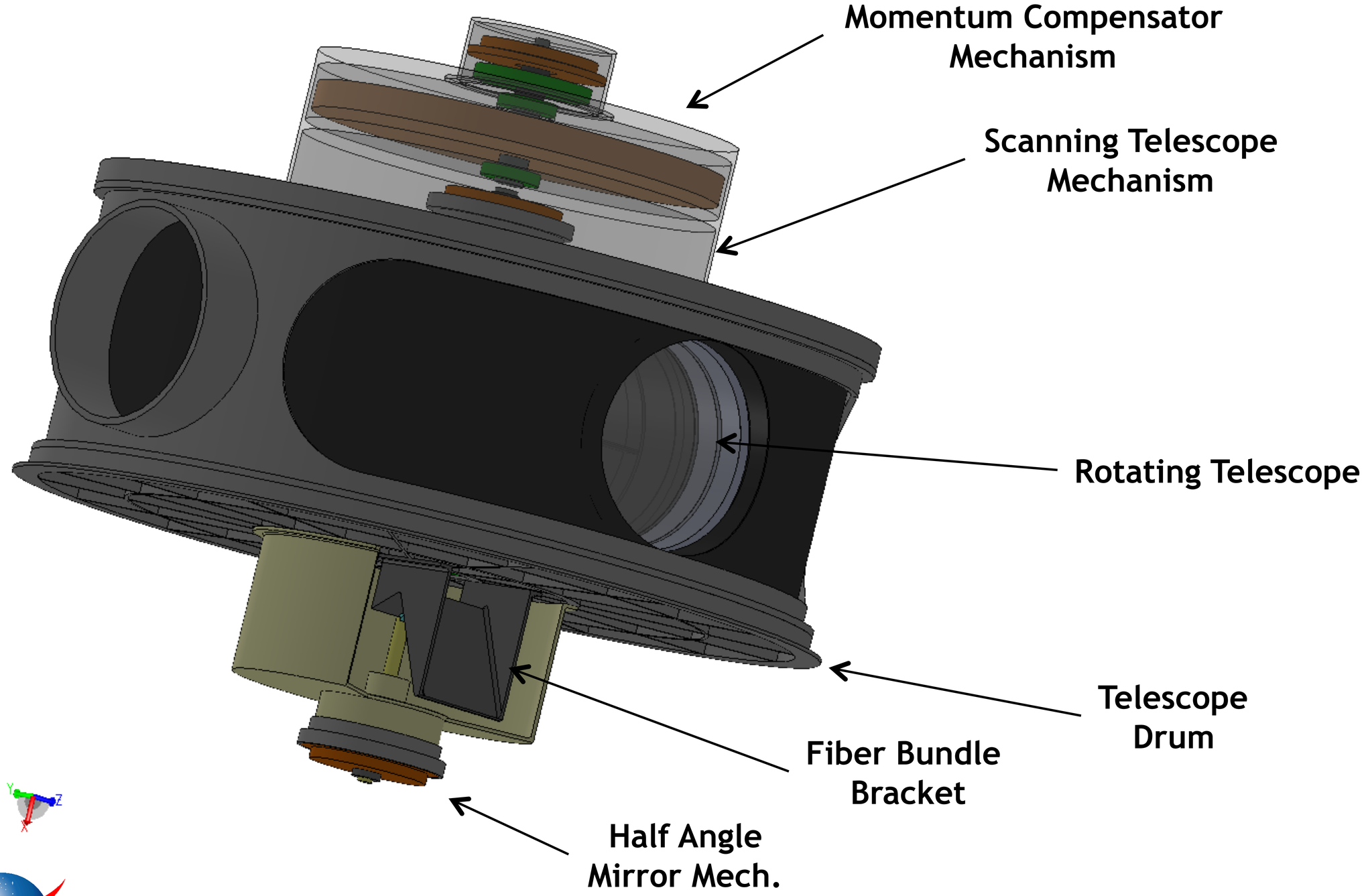

Use or disclosure of this data is subject to the restriction on the title page of this document

Scanning Telescope Assembly

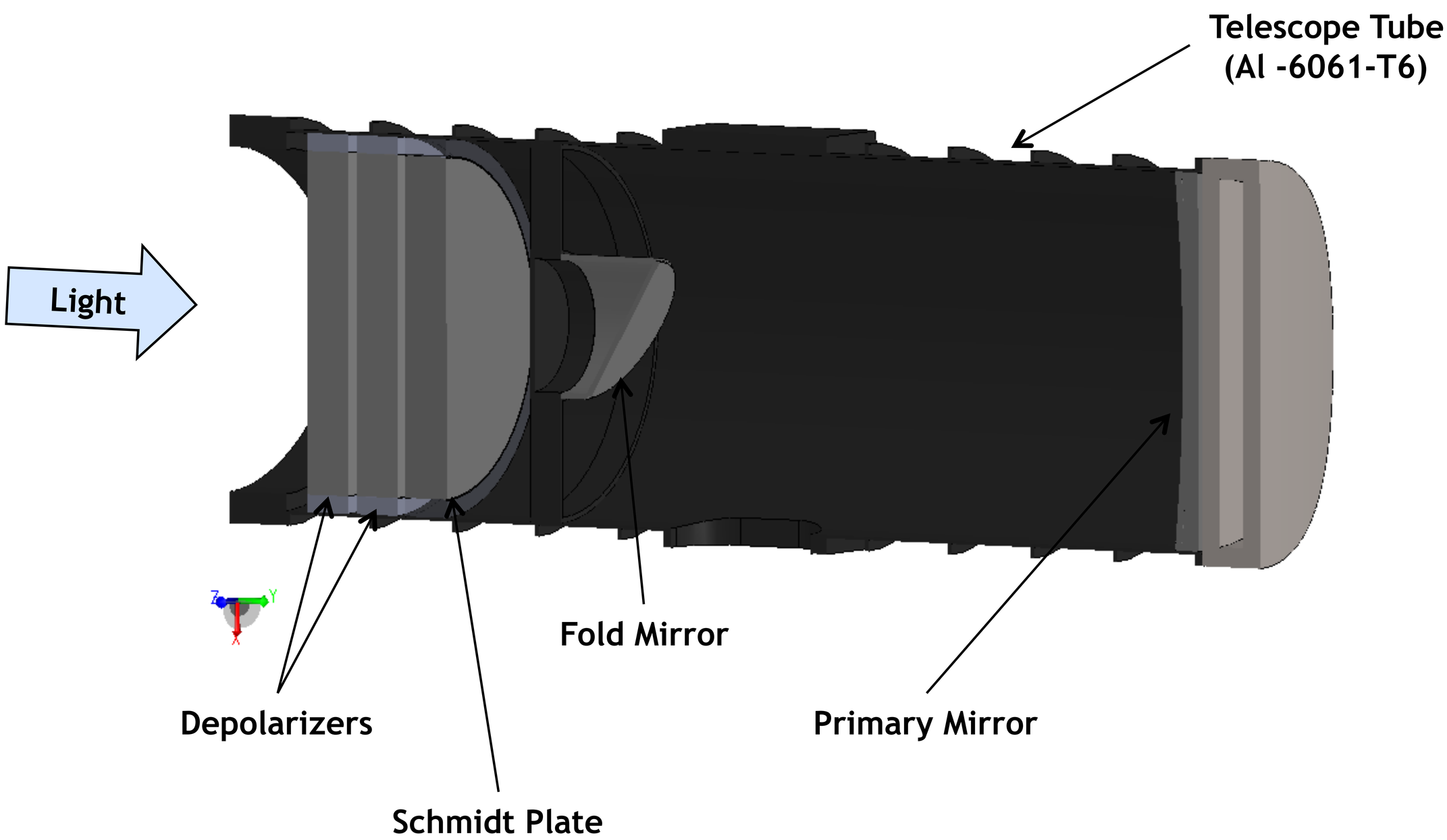

Use or disclosure of this data is subject to the restriction on the title page of this document

Aft Optics/Detector Assembly

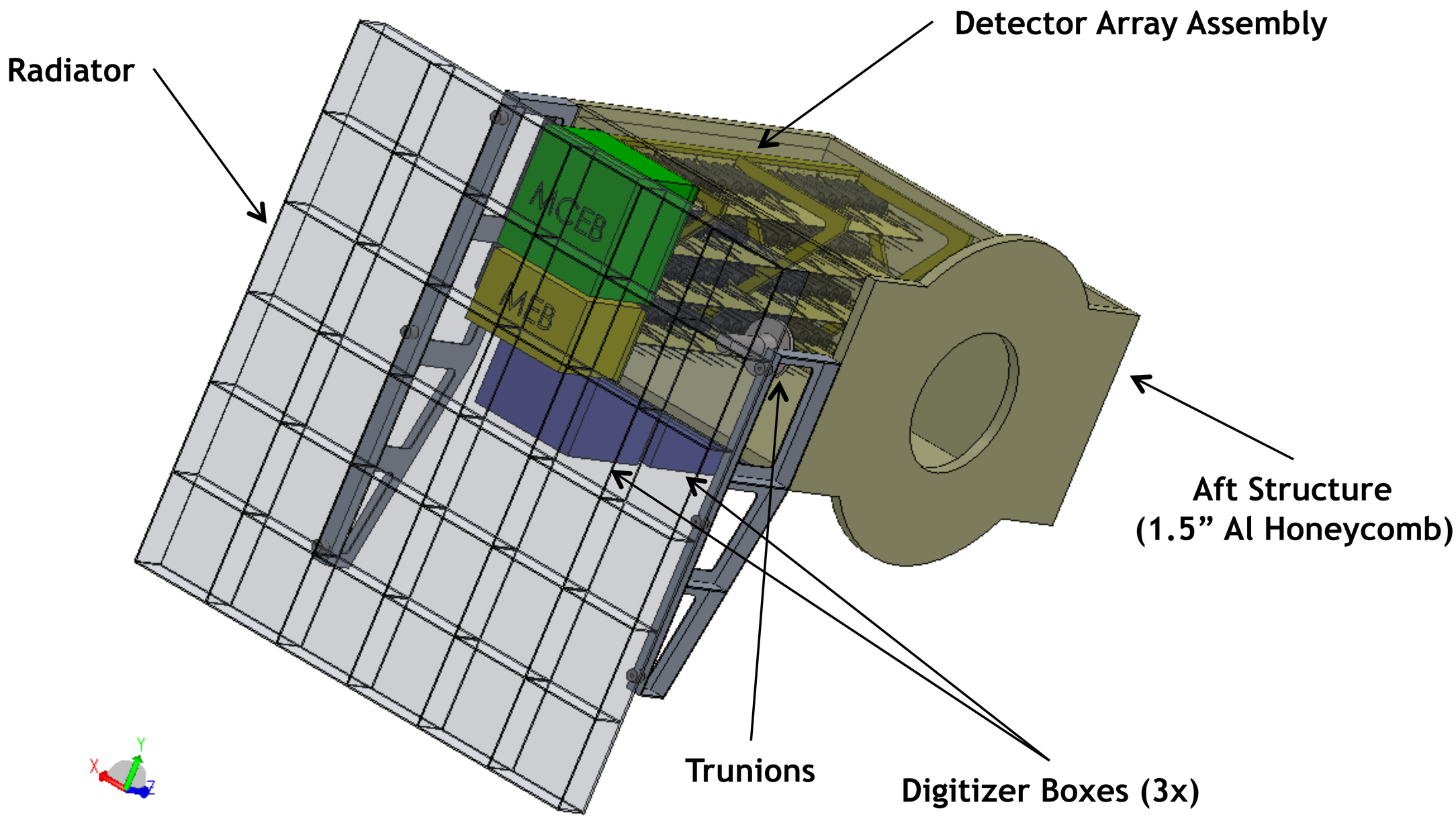

Use or disclosure of this data is subject to the restriction on the title page of this document

Detector Array Assembly

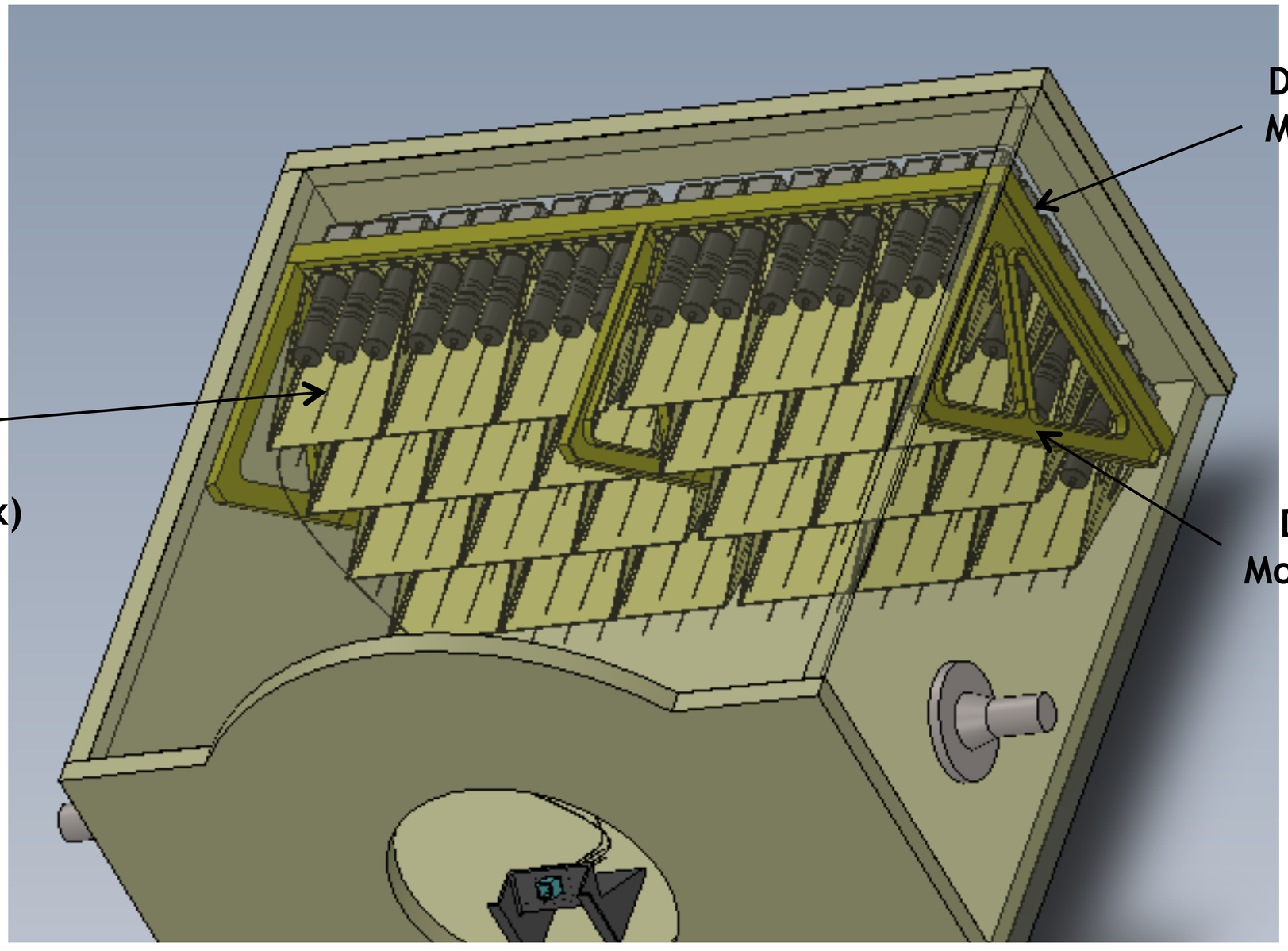

Use or disclosure of this data is subject to the
restriction on the title page of this document

Trade to Add Third Brace

- **Used FEA to compare advantages of 2 vs 3 braces holding the Detector Array Mounting Plate**
  - Simple model using Bar and Plate Elements
  - Mass of Six Pack Assemblies modeled as non-structural mass

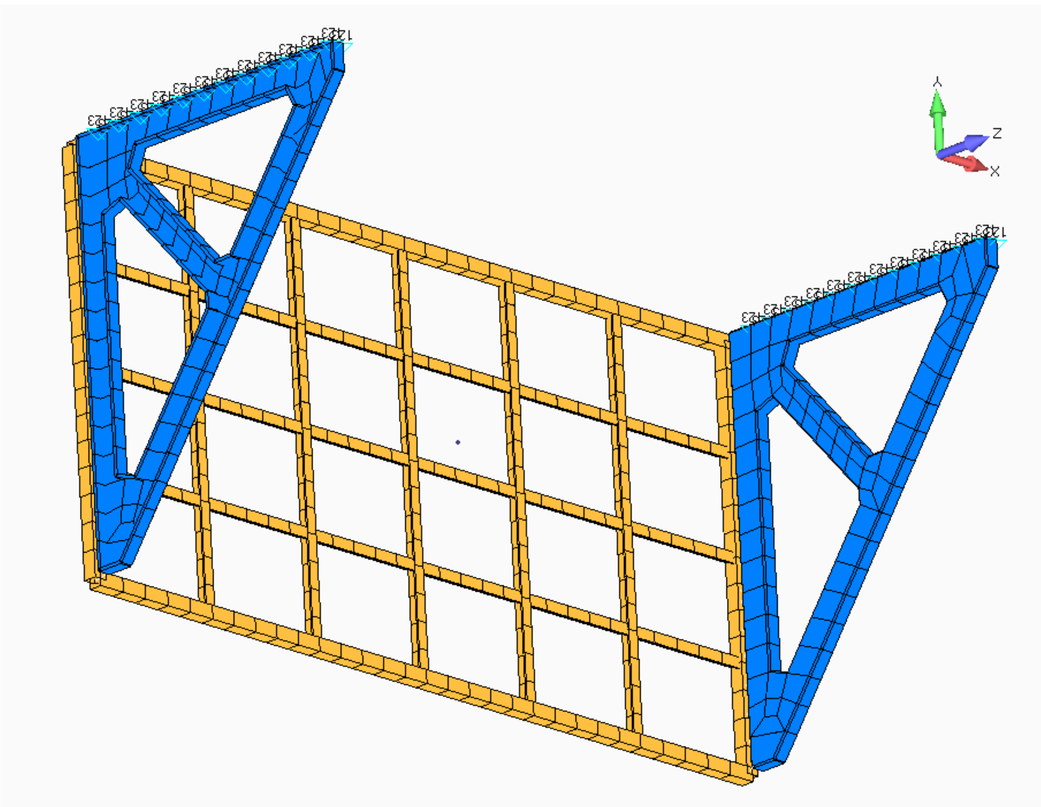

vs

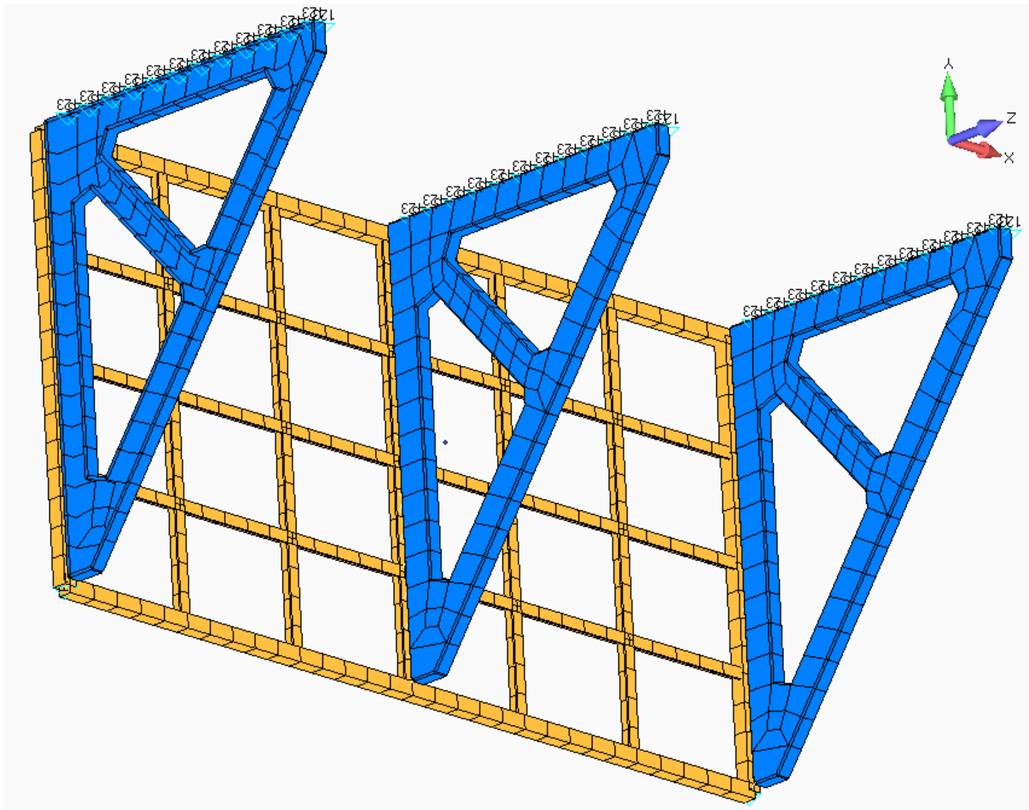

Use or disclosure of this data is subject to the restriction on the title page of this document

FEA Results

- First mode for two braces 13Hz

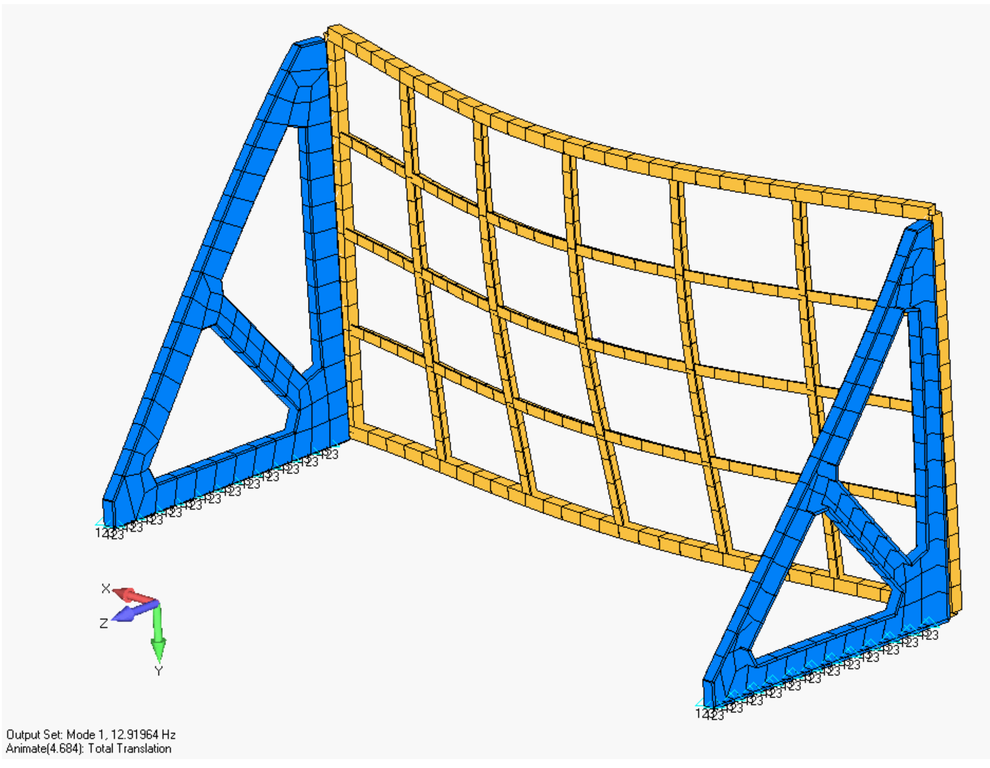

First mode for three braces 21Hz

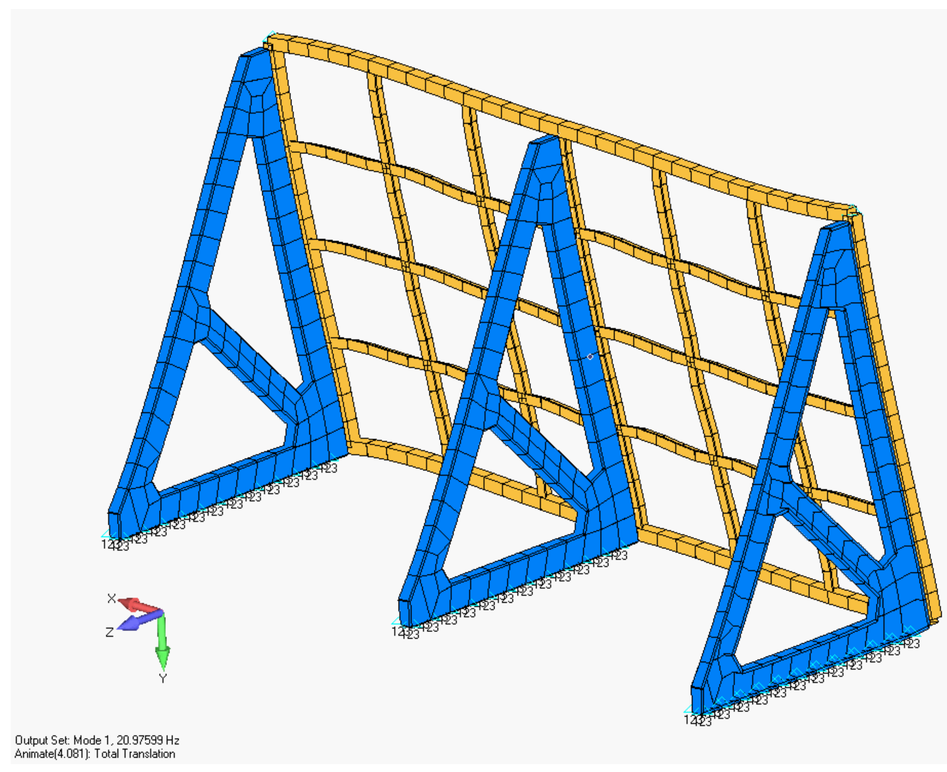

Use or disclosure of this data is subject to the restriction on the title page of this document

Side Support for Detector Array Structure Assembly

- First mode still low, add support by connecting to Aft Structure Side Panel
  - Increase First Mode to 41Hz which is likely acceptable (need structures blessing)
  - Might need to further increase stiffness

Attach Detector Array Structure Assembly to Aft Structure Side Panel Here

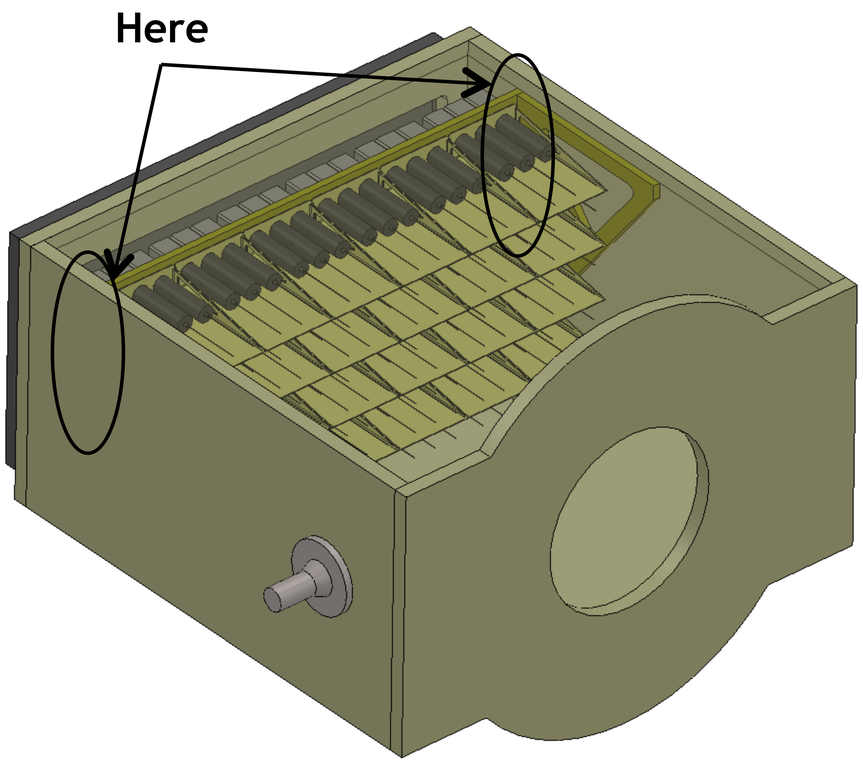

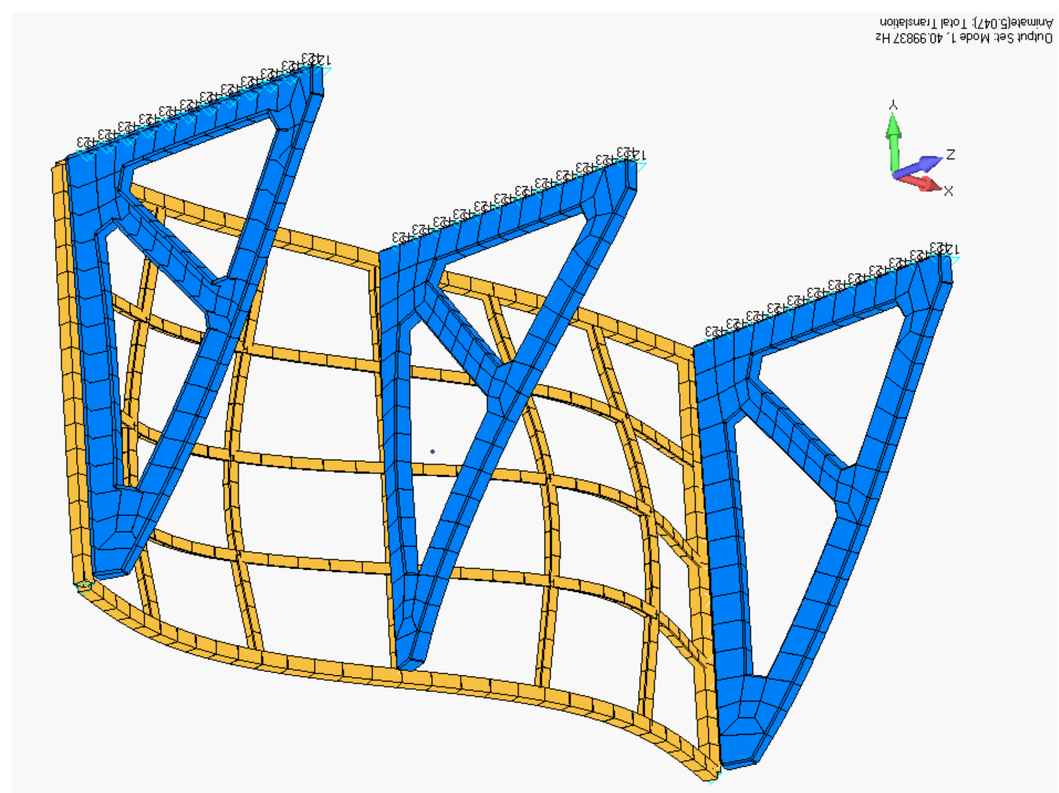

Use or disclosure of this data is subject to the restriction on the title page of this document

Preliminary FEA of Detector Array Structure Assembly

- Material: Al 6061-T6
- Allowable Assumed (yield): 32ksi
- FS: 1.25
- Max stress: 8.1ksi
- Margin of Safety: (32)/(8.1*1.25)-1 = <u>+2.16</u>

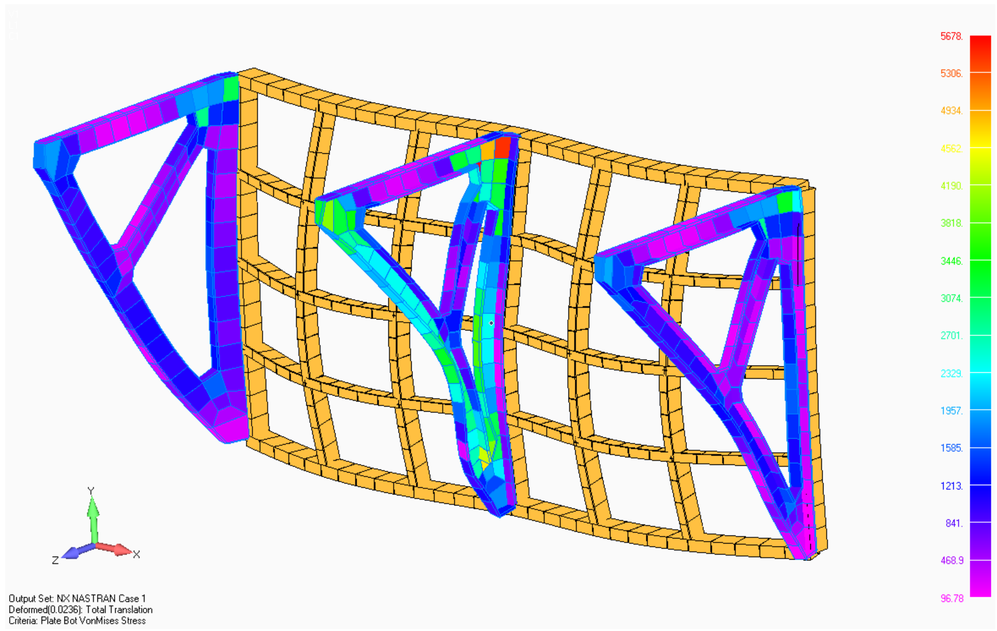

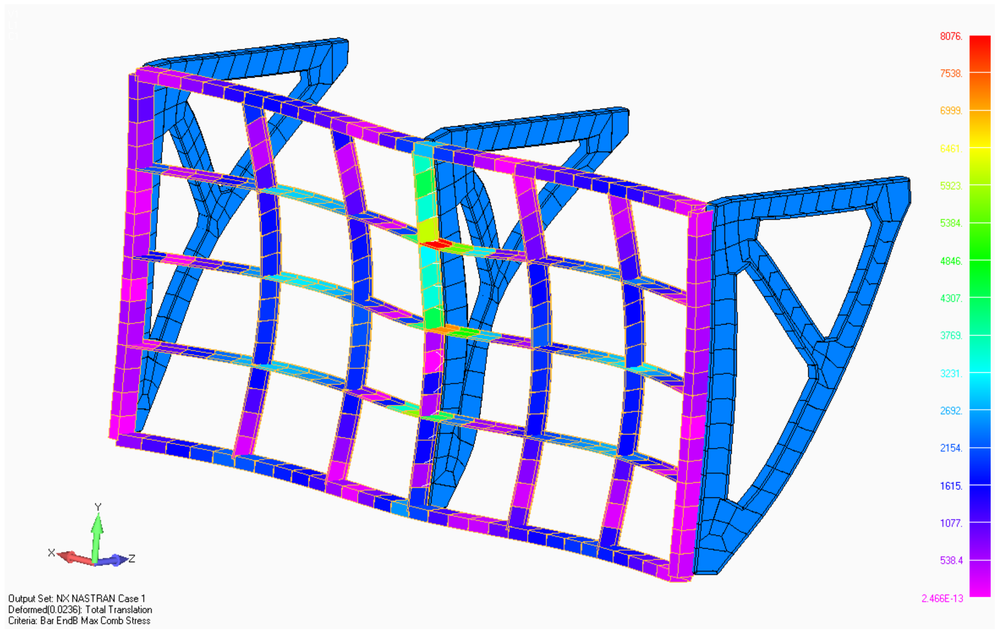

Use or disclosure of this data is subject to the restriction on the title page of this document

Detector Six Pack

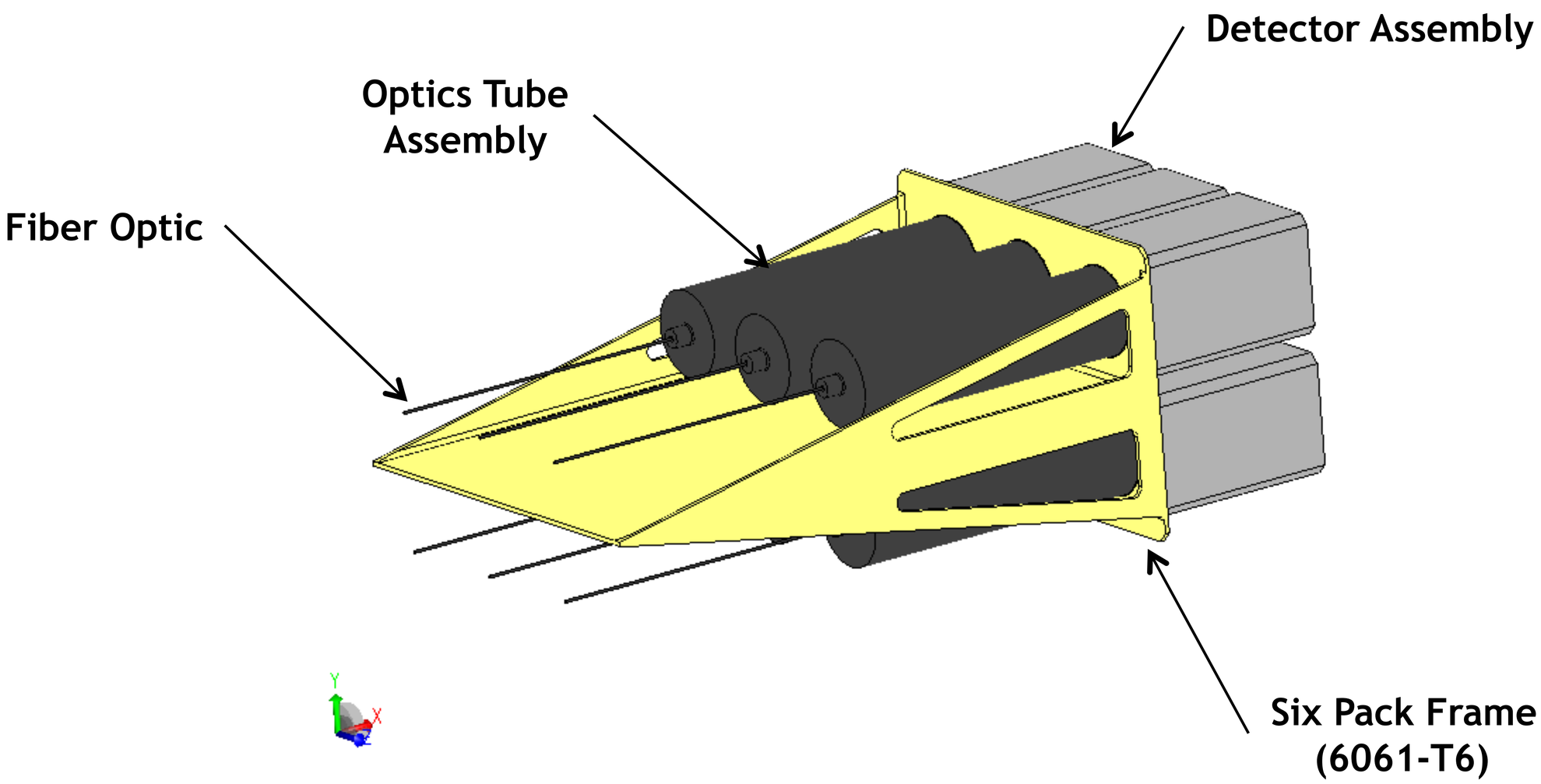

Note: Lens/Detector Assembly = Optics Tube Assembly + Detector Assembly

Use or disclosure of this data is subject to the restriction on the title page of this document

Lens/Detector Assembly

Based on ATLAS Design

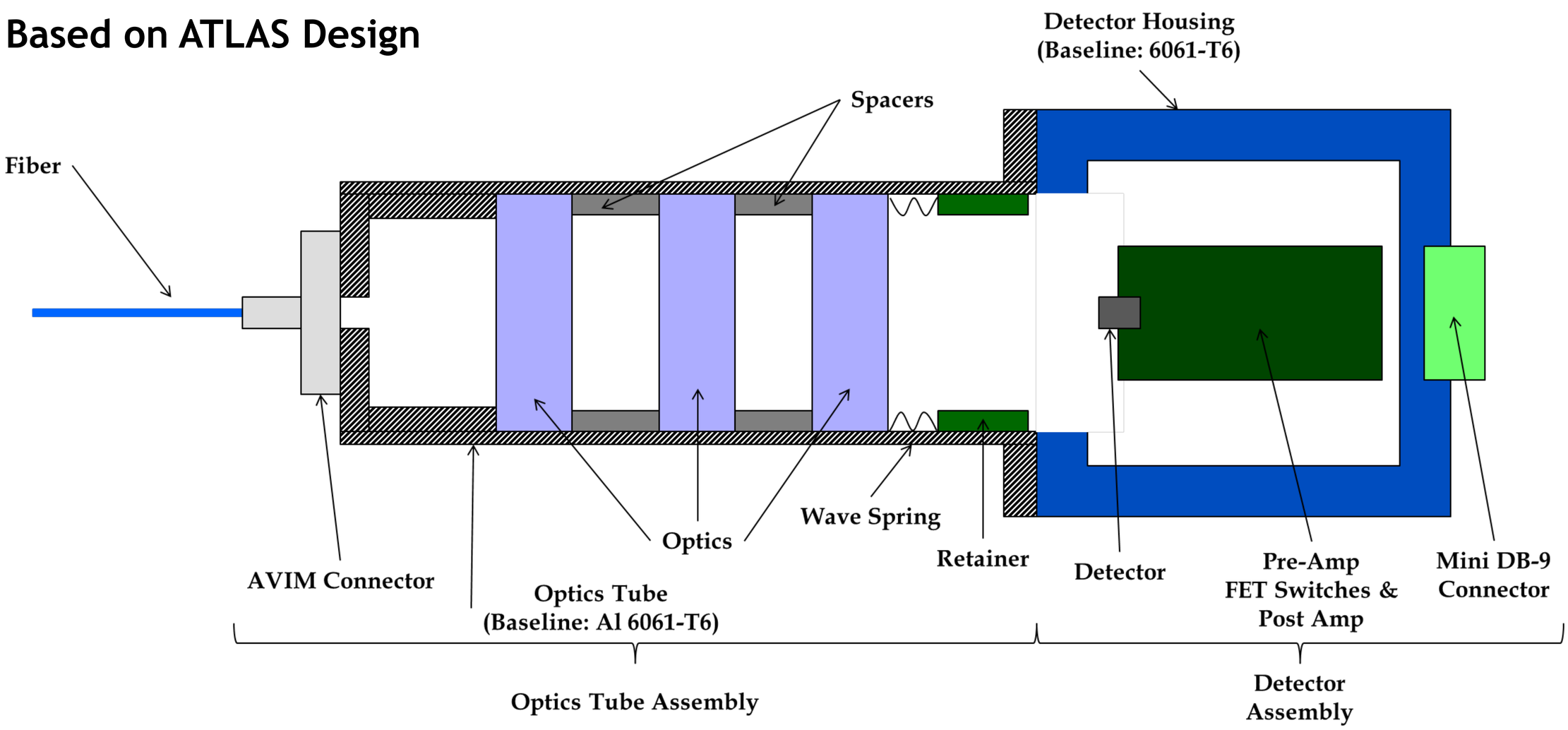

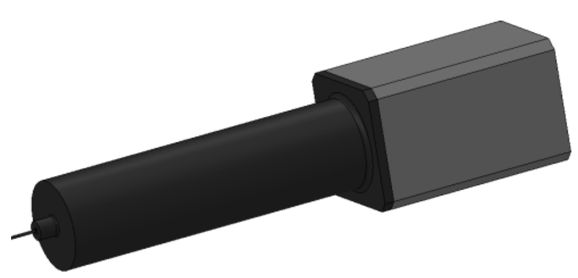

Note: Material to be used for the Optics Tube and Detector Housing is baselined as Aluminum. Depending on temperature excursions of the assembly and optical alignment tolerances, it might be necessary to use Titanium instead.

Use or disclosure of this data is subject to the restriction on the title page of this document

ATLAS Optics Tube

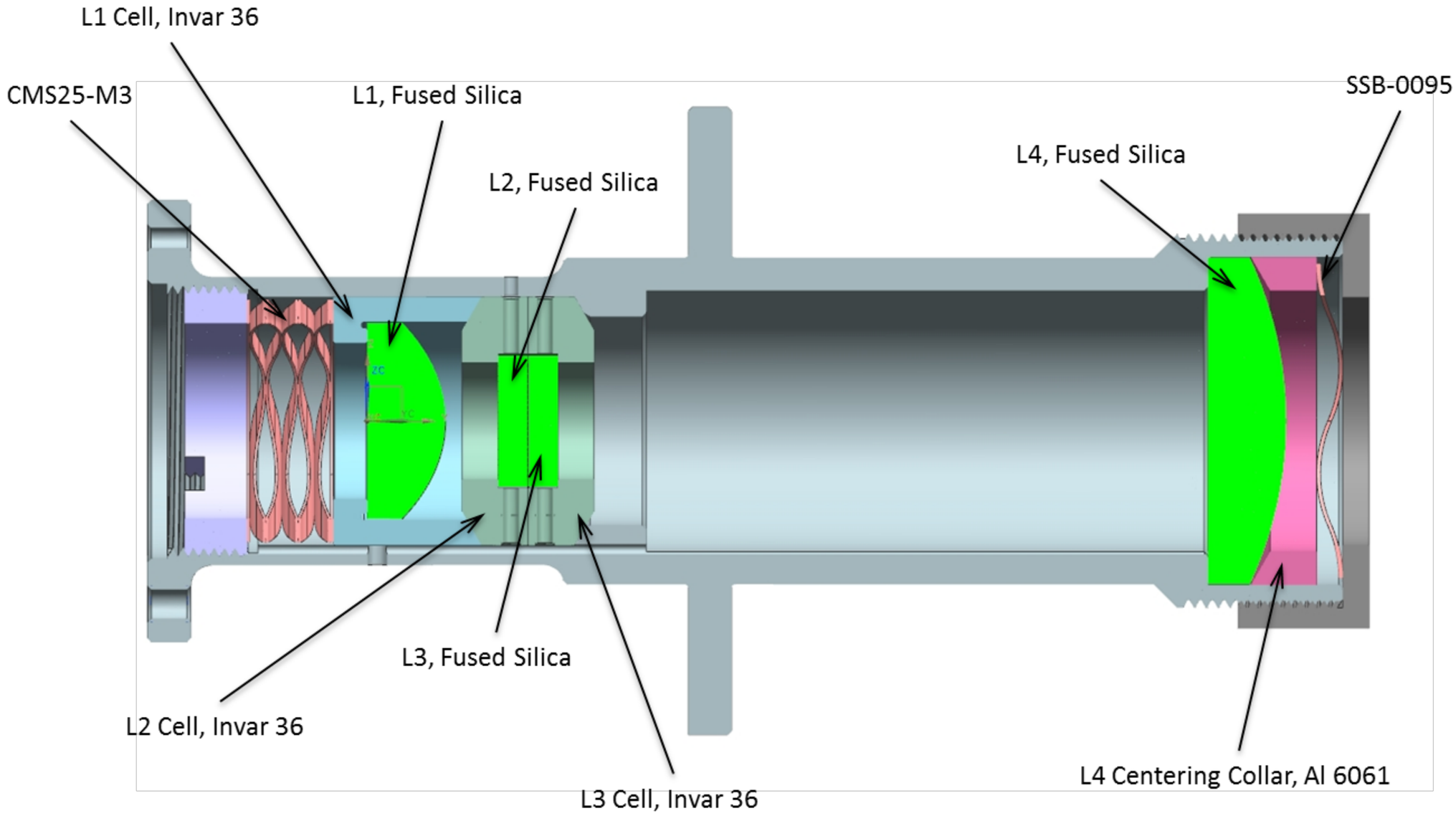

Use or disclosure of this data is subject to the restriction on the title page of this document

Fiber Optic Routing

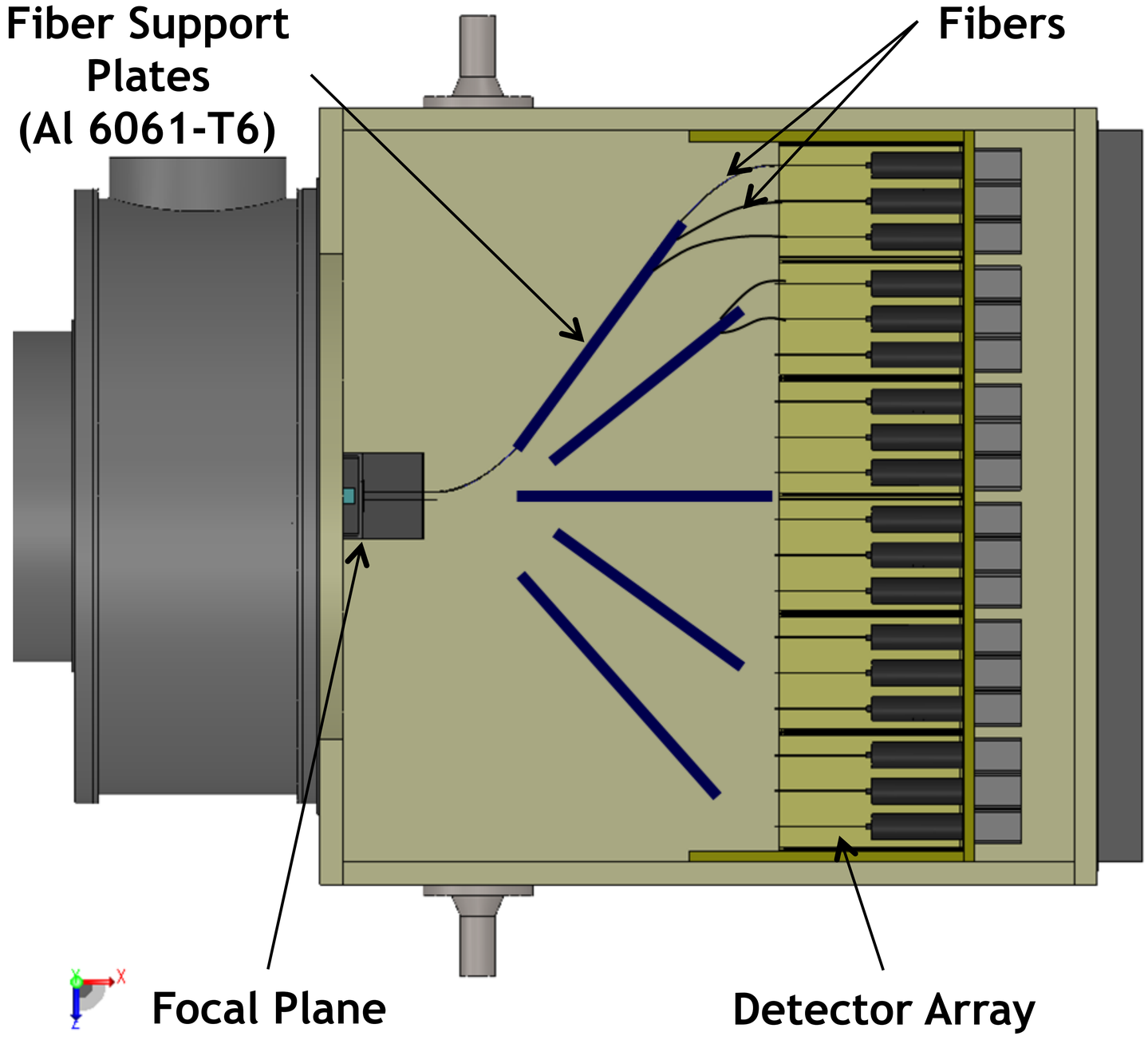

Fiber Support Plates have C-channels to route the Fiber optics. It guides them and maintains minimum bend radii

Use or disclosure of this data is subject to the restriction on the title page of this document

Cradle Assembly

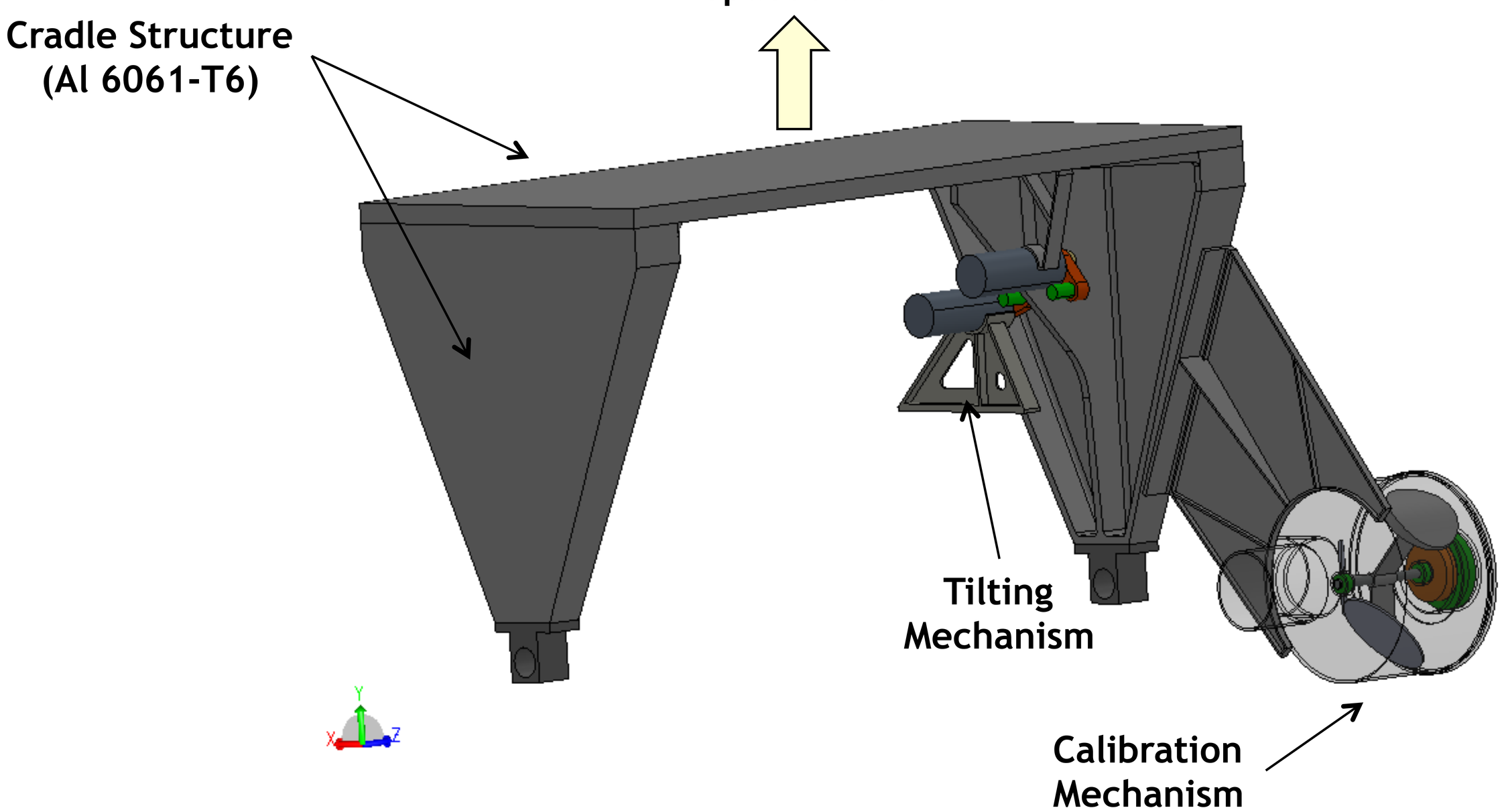

Use or disclosure of this data is subject to the restriction on the title page of this document

Radiator

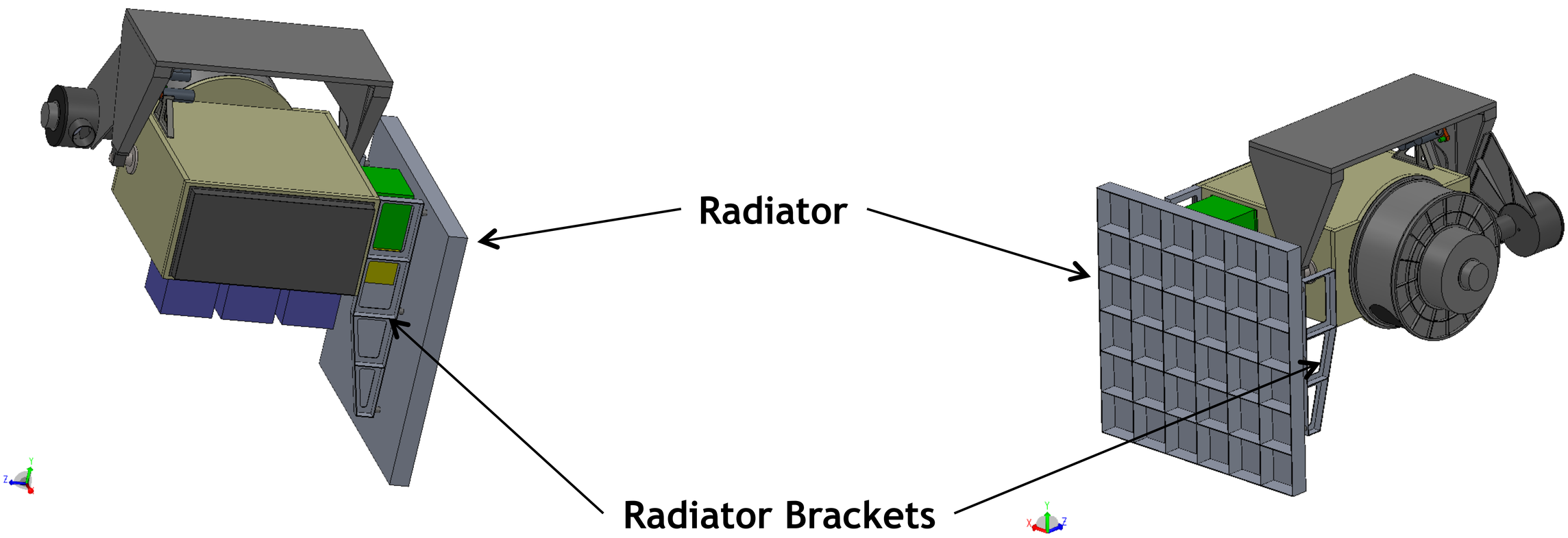

Radiator attaches to structure using two Al 6061-T6 brackets. If there is a thermal gradient between the radiator and the structure, it is possible to add a flexure set between the brackets and the radiator.

Use or disclosure of this data is subject to the restriction on the title page of this document

Concerns

- **Alignment of Optics Tube components and Detector Assembly**
  - Labor intensive for 144 Assemblies if tolerances are tight and alignment needs to be done “by hand” (as opposed to using machine tolerances)
- **Routing of Fiber optics**
  - Difficult Assembly (routing)
  - Nested assembly would make it difficult to disassemble
- **Alignment of fiber bundle to HAM to Telescope**
- **Radiator is large and heavy**
  - Need further analysis to ensure structure to attach radiator to instrument provides adequate support

Use or disclosure of this data is subject to the restriction on the title page of this document