Ocean Color Experiment Ver. 3 (OCE3)

~ Optics~

June 18, 2011

The IDL Team shall not distribute this material without permission from Betsy Edwards (Betsy.Edwards@nasa.gov)

Overview

- First Order Layout
- Image Plane Layout
- Fore-Optics Design Form – Modified Schmidt Telescope
- Aft-Optics Design Forms –
  - 250m spectrometer Channel
  - 1km spectrometer Channel – BLUE
  - 1km spectrometer channel - RED
- Mass Estimate
- Concerns
- Conclusions

Use or disclosure of this data is subject to the restriction on the title page of this document

First Order Layout Changes

OCE 2

Tel EAP	**180**	**mm**
Tel fl	**520**	**mm**
-> Tel f/#	2.89	f/#
-> Convergance	0.17	rad
	9.92	deg
-> Min NA:	0.172	NA
Orbit Height	**650**	**km**
Nader Spot	**1**	**km**
-> FOV:	0.00154	rad
	1.53846	mrd
	0.0881	deg
	5.29	amin
-> Image Size	0.800	mm
Fiber Core Size	**0.8**	**mm**
Fiber NA	**0.22**	**NA**
-> Acceptance	12.71	deg
Fiber spacing	0.88	mm

OCE 3

Tel EAP	**180**	**mm**
Tel fl	**600**	**mm**
-> Tel f/#	3.33	f/#
-> Convergance	0.15	rad
	8.59	deg
-> Min NA:	0.149	NA
Orbit Height	**750**	**km**
Nader Spot	**1**	**km**
-> FOV:	0.00133	rad
	1.33333	mrd
	0.0764	deg
	4.58	amin
-> Image Size	0.800	mm
Fiber Core Size	**0.8**	**mm**
Fiber NA	**0.22**	**NA**
-> Acceptance	12.71	deg
Fiber spacing	0.88	mm

@ 700 km => EFFL = 560 mm

(minimal impact to volume/mass estimate)

Use or disclosure of this data is subject to the restriction on the title page of this document

Final Baseline Focal Plane Slit/Fiber Layout

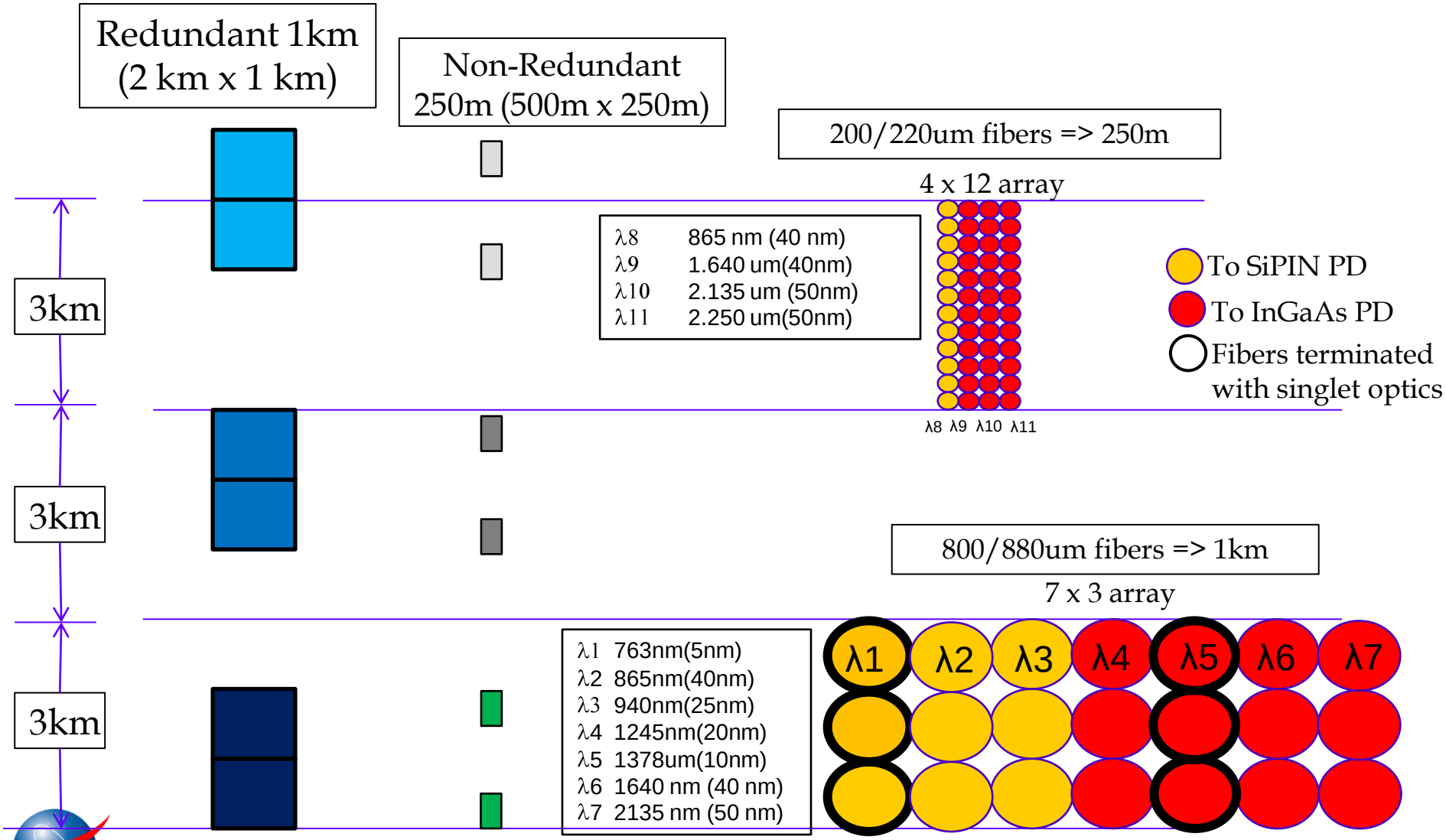

Use or disclosure of this data is subject to the restriction on the title page of this document

Fore-Optics Design Form - Modified Schmidt Telescope

This modified Schmidt telescope design form was chosen based on the needs for a

- Compact design
- Modest 2-D FOV
- Minimal crosstalk
- Low polarizance

0.5 meters

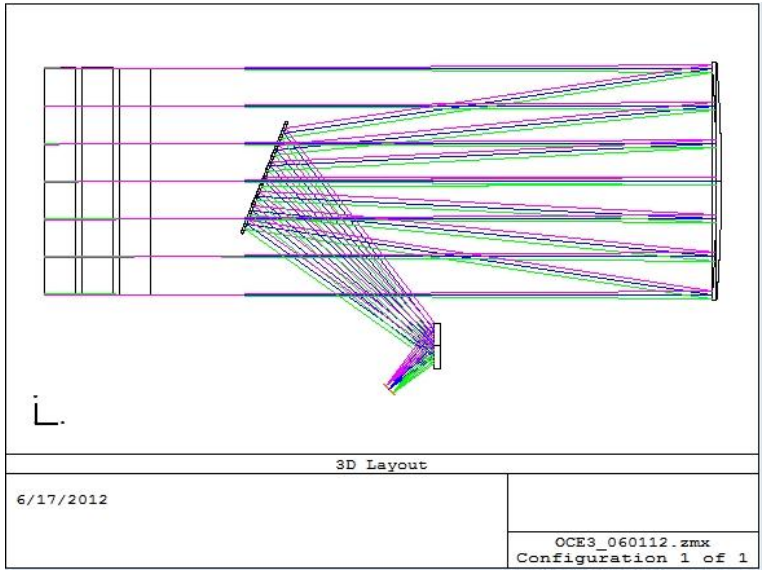

Image Quality at Fiber

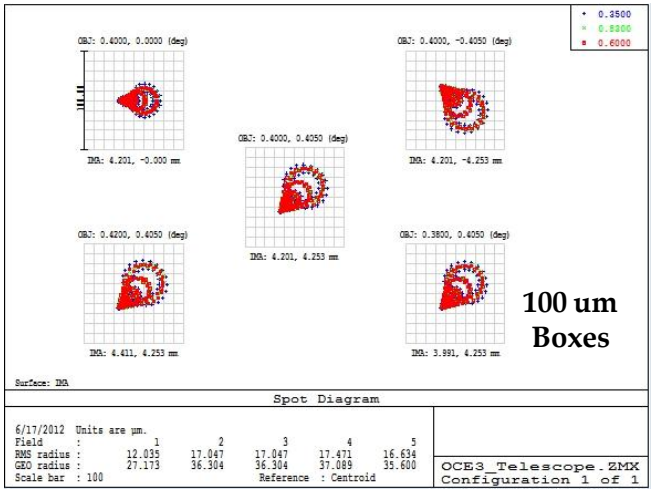

Effective Focal Length (mm)	600
F/#	3.3
Plate Scale	1 km / fiber core (0.8 mm)
FOV (degrees)	0.8 x 0.8
Wavelength (nm)	350-2400
Pupil Diameter	180

Use or disclosure of this data is subject to the restriction on the title page of this document

Image Quality at the Focal Plane of the Telescope

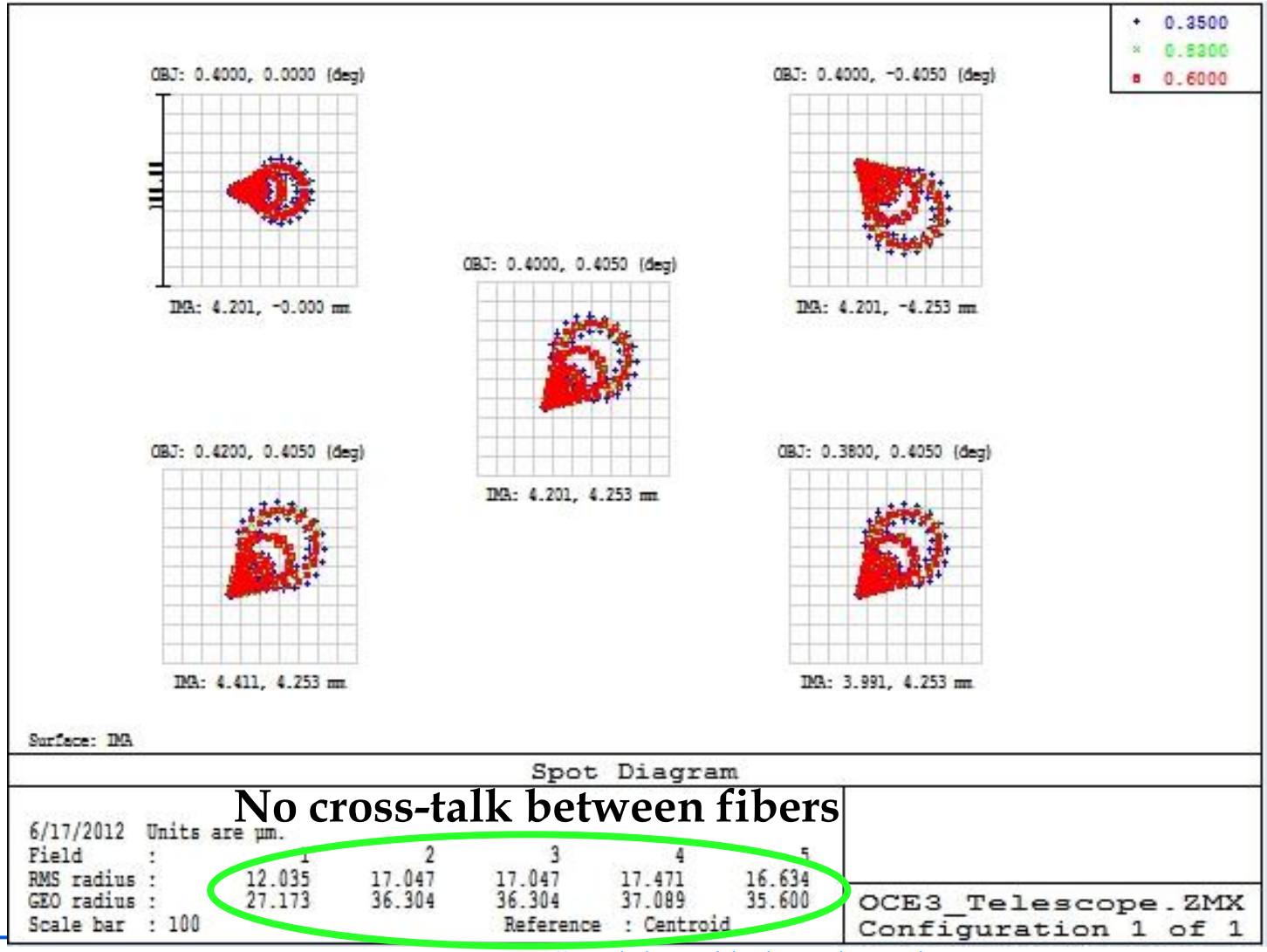

No cross-talk between fibers

Use or disclosure of this data is subject to the restriction on the title page of this document

Image Slicer

Re-routing the light at the image plane of the telescope to the various spectrometer channels will be a challenge.

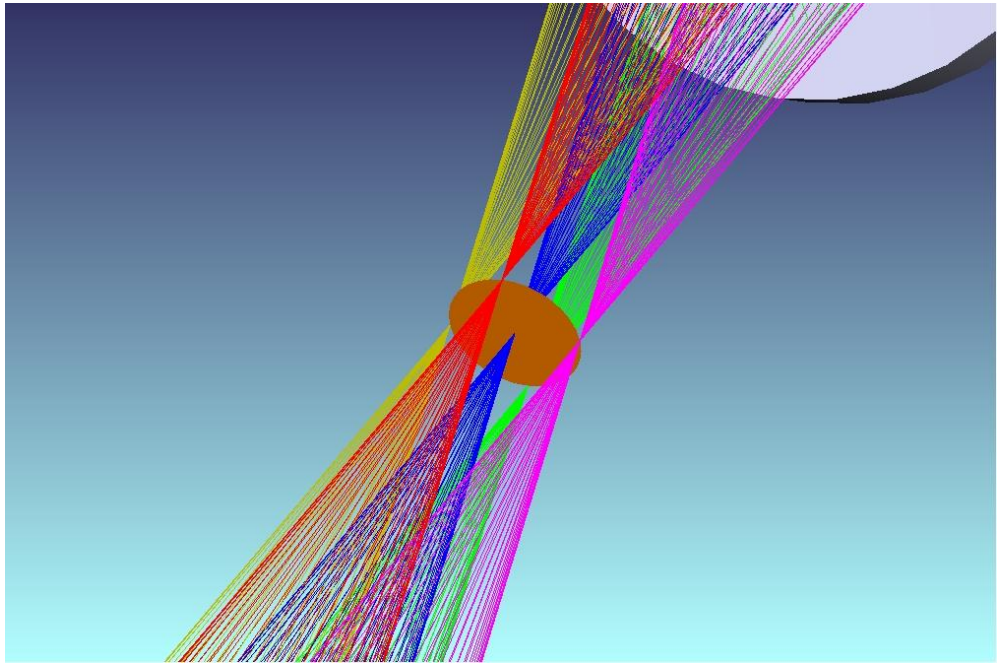

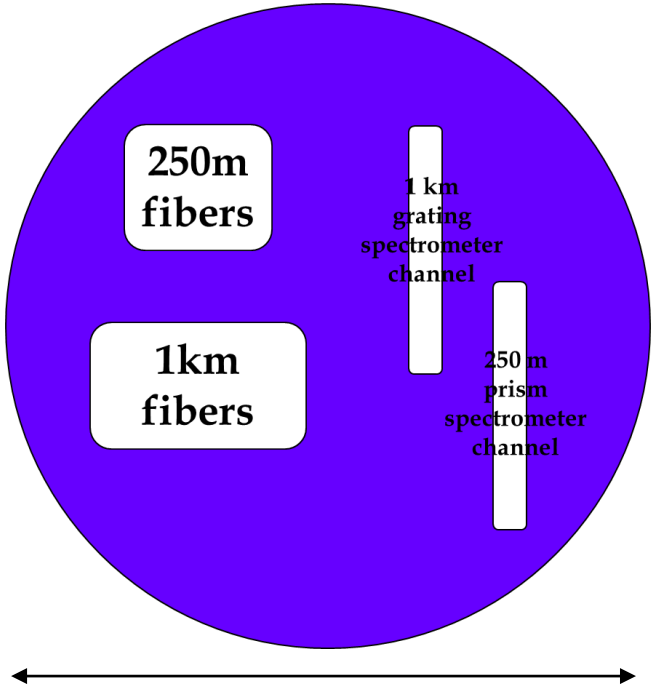

12 mm

Note: geometry not drawn to scale

Use or disclosure of this data is subject to the restriction on the title page of this document

Notional Image Slicer

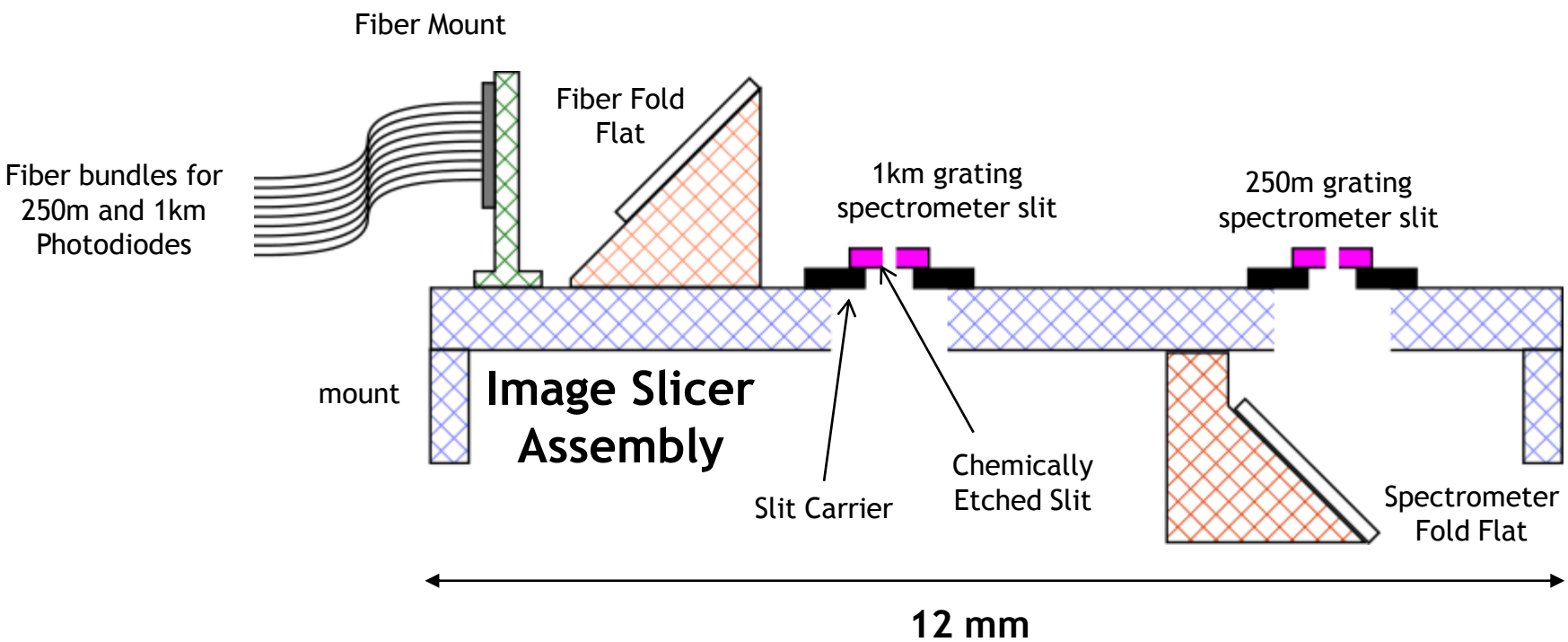

Use or disclosure of this data is subject to the restriction on the title page of this document

Aft Optics Design - 1km Spectrometer Channels

Specifications

- 2X Magnification
- BLUE
  - Bandpass: .350-.600 um
  - Grating Spec: 1000 ln/mm
- RED
  - Bandpass: .600-.830 um
  - Grating Spec: 920 ln/mm

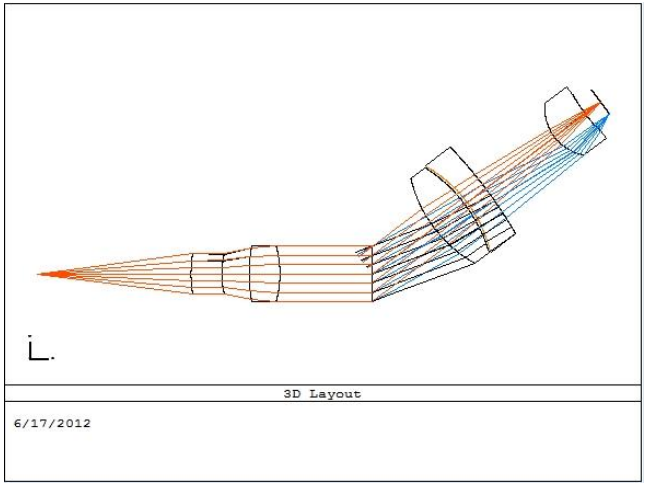

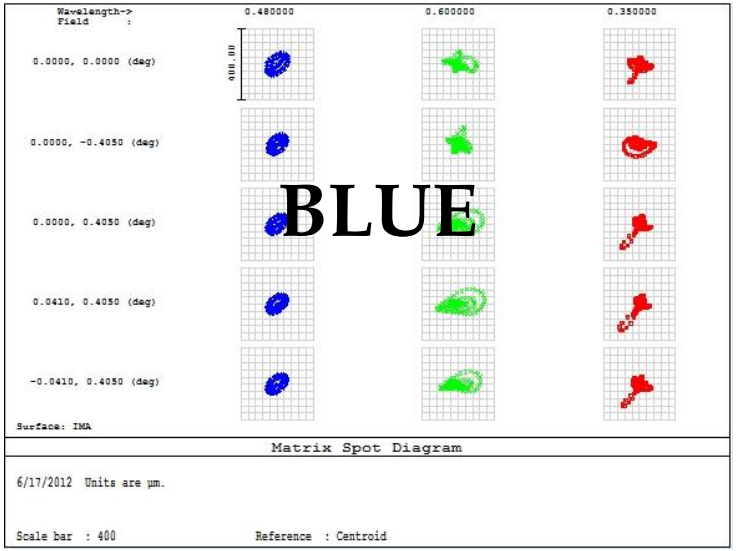

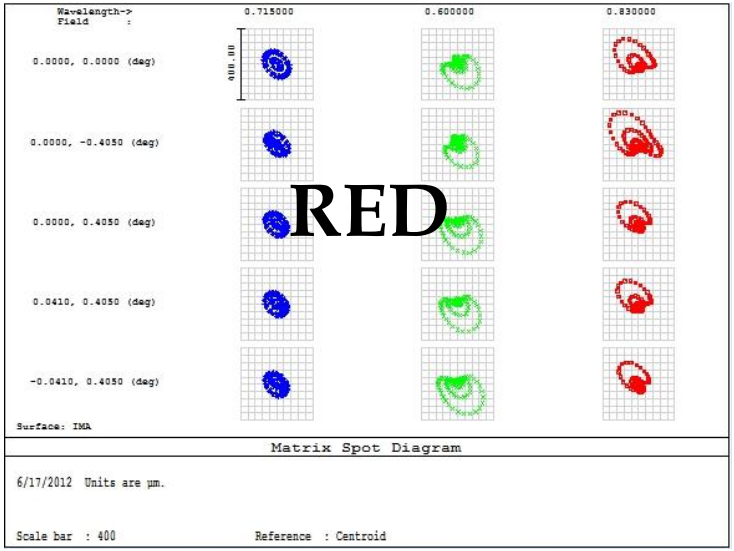

400 um Boxes

Use or disclosure of this data is subject to the restriction on the title page of this document

Aft Optics Design - 250m Spectrometer Channel

Specifications

- 2X Magnification
- Bandpass: .350-.830 um
- Prism Wedge: 7.5 degrees

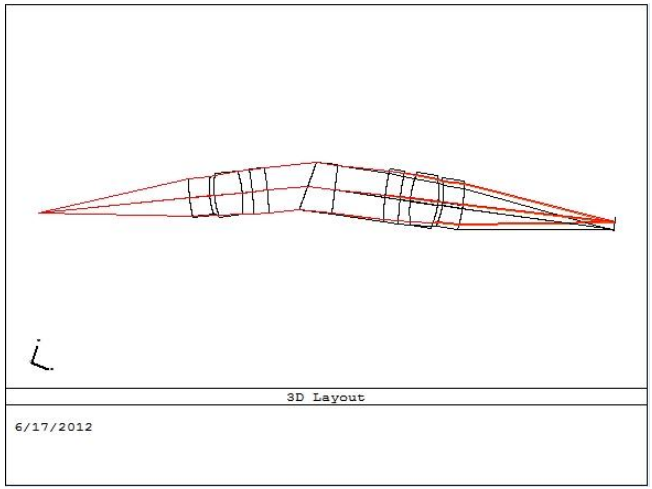

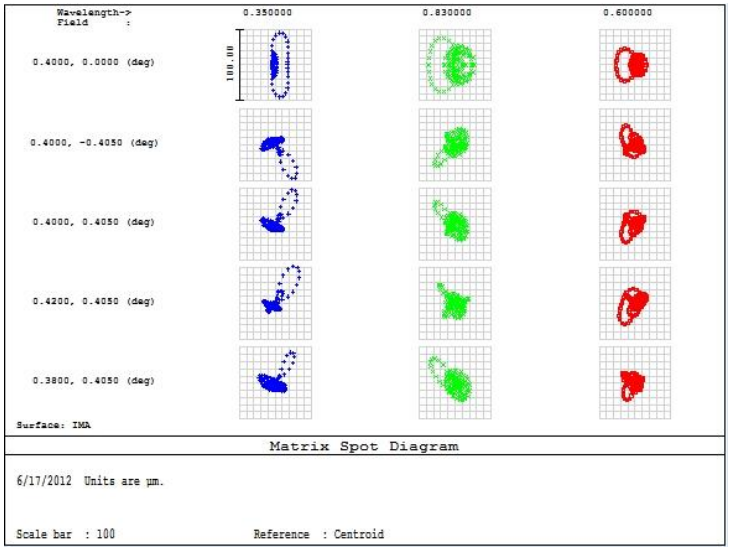

100 um Boxes

Use or disclosure of this data is subject to the restriction on the title page of this document

250 m Channel Spectral Resolution

It is possible to improve the linearity of the spectral resolution by using two (or more) prisms made of different glass types.

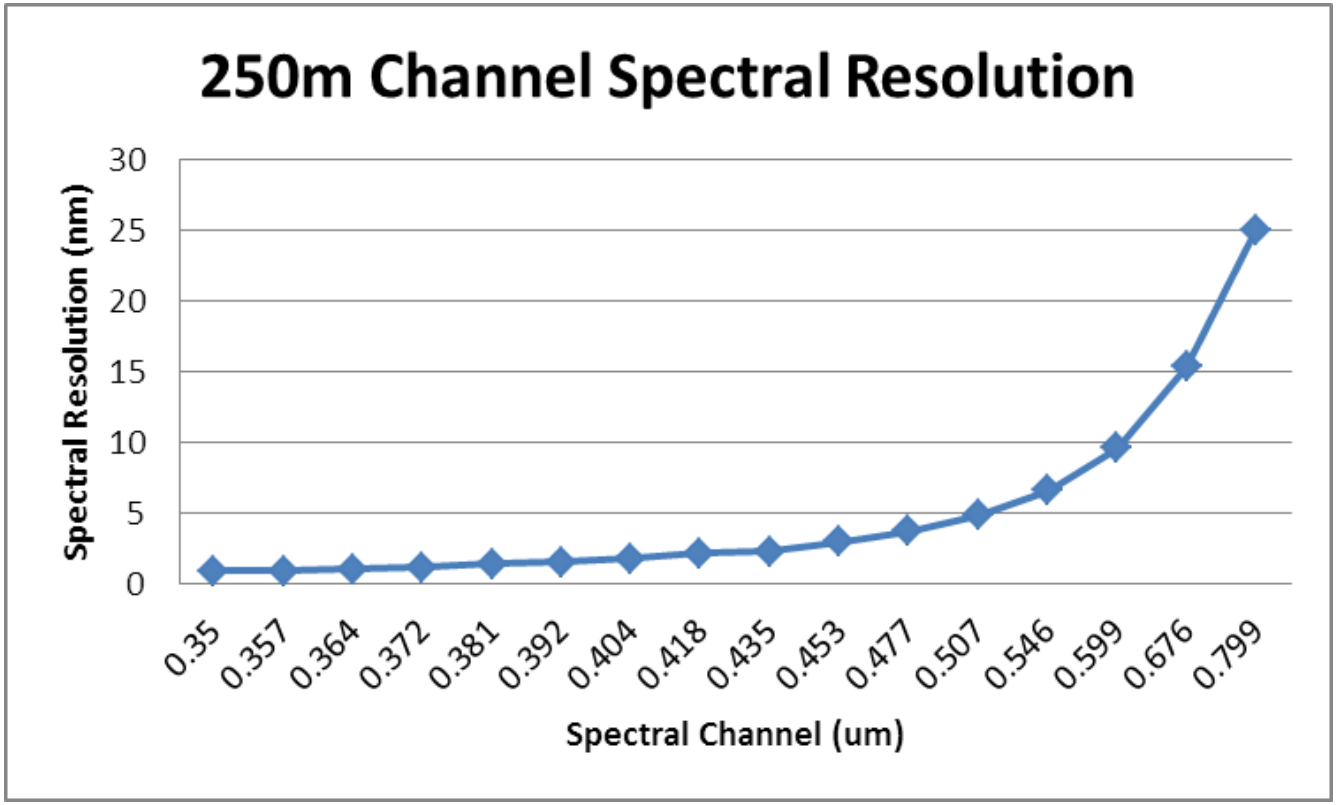

Use or disclosure of this data is subject to the restriction on the title page of this document

Fiber Terminator Options

As described by industry (2 vendors)

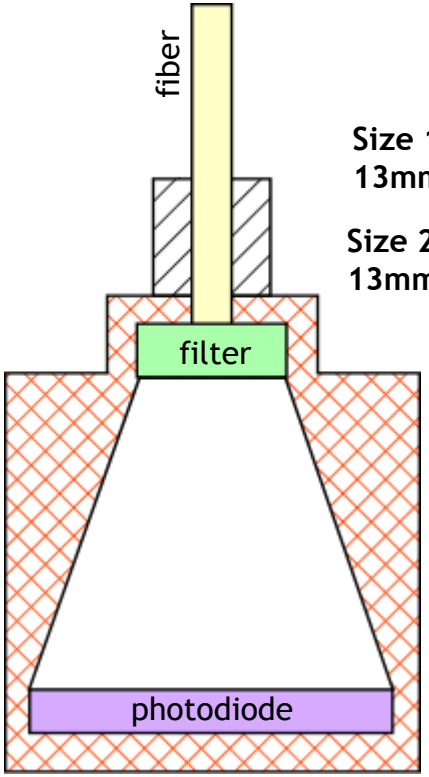

Size 1 (250m): 14mm diam, 13mm height

Size 2 (1km): 22mm diam, 13mm height

We suspect this is the function inside the connector terminator, as the vendor did not disclose it - it is not ideal because the incident light on the detector is coming in at off normal angles

The hardware we've realized in our mass model, because we're certain it can work

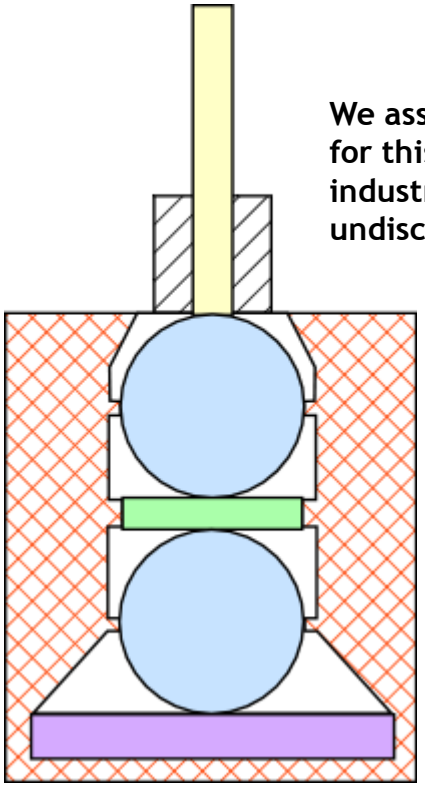

We assumed the same sizes for this approach as industry proposed for their undisclosed design

The ball spheres mimic the same function as we have shown in the larger singlet design, but keeps all incident light on the filter closer to normal for less loss in thru-put

Use or disclosure of this data is subject to the restriction on the title page of this document

http://www.edmundoptics.com/learning-and-support/technical/le

Understanding Ball Lenses |...

File Edit View Favorites Tools Help

Home | Products | Learning and Support | Capabilities | Applications | Company

Understanding Ball Lenses

APPLICATION EXAMPLES

Example 1: Laser to Fiber Coupling

When coupling light from a laser into a fiber optic, the choice of ball lens is dependent on the NA of the fiber and the diameter of the laser beam, or the input source. The diameter of the laser beam is used to determine the NA of the ball lens. The NA of the ball lens must be less than or equal to the NA of the fiber optic in order to couple all of the light. The ball lens in contact with the fiber as shown in Figure 3.

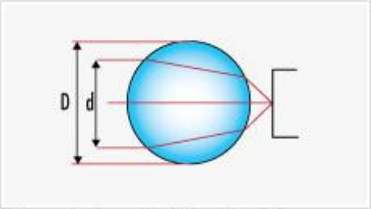

Figure 3: Laser to Fiber Coupling

Initial Parameters

Diameter of Input Laser Beam = 2mm
Index of Refraction of Ball Lens = 1.517
Numerical Aperture of Fiber Optic = 0.22

Calculated Parameter

Diameter of Ball Lens

$$D = \frac{2d(n-1)}{nNA} \quad (4)$$

$$D = \frac{2\ x\ 2mm\ (1.517-1)}{1.517\ x\ 0.22} = 6.2mm$$

A N-BK7 ball lens (index of refraction of 1.517) of 6-8mm in diameter would be ideal for coupling a 2mm laser source into a 0.22NA fiber optic. One can easily try different indices of refraction in order to find the best ball lens for a laser to fiber coupling application.

Example 2: Fiber to Fiber Coupling

To couple light from one fiber optic to another fiber optic of similar NA, two identical ball lenses are used. Place the two ball lenses in contact with the fibers as shown in Figure 4. If the fiber optics have the same NA, then the same logic as in Example 1 can be applied.

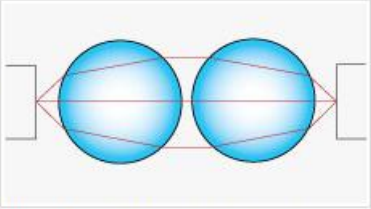

Figure 4: Fiber to Fiber Coupling

Use or disclosure of this data is subject to the restriction on the title page of this document

Fiber Optic SWIR Aft-Optics Design

Integrated Design Capability / Instrument Design Laboratory

OCE2
25 mm Singlet Relay

PERFORMANCE:			
Wavelength	**1000**		**nm**
Bandpass	**5**		**nm**
TELESCOPE FOCAL PLANE:	**WORST**	**BEST**	
-> Shift	0.39%	0.14%	%
-> Broadening	3.9	1.4	nm
-> FWHM	8.9	6.4	nm
FIBER OUTPUT:	**WORST**	**BEST**	
-> Shift	0.55%	0.21%	%
-> Broadening	5.5	2.1	nm
-> FWHM	10.5	7.1	nm
WITH COLLIMATOR:	**WORST**	**BEST**	
-> Shift	0.02%	0.01%	%
-> Broadening	0.20	0.09	nm
-> FWHM	5.20	5.09	nm

OCE3
5 mm Ball Lens Relay

PERFORMANCE:			
Wavelength	**1000**		**nm**
Bandpass	**5**		**nm**
TELESCOPE FOCAL PLANE:	**WORST**	**BEST**	
-> Shift	0.32%	0.11%	%
-> Broadening	3.2	1.1	nm
-> FWHM	8.2	6.1	nm
FIBER OUTPUT:	**WORST**	**BEST**	
-> Shift	0.55%	0.21%	%
-> Broadening	5.5	2.1	nm
-> FWHM	10.5	7.1	nm
WITH COLLIMATOR:	**WORST**	**BEST**	
-> Shift	0.21%	0.06%	%
-> Broadening	2.09	0.63	nm
-> FWHM	7.09	5.63	nm

Further analysis is required to determine if the 5 mm ball lens relay meets the spectral resolution requirements.

Use or disclosure of this data is subject to the restriction on the title page of this document

Optics Mass Estimate - OCE2

Component Name	SubSystem	Engineer	Flight Quantity	Unit Mass CBE kg	Unit Assembly Mass kg
Telescope Options					
Depolarizer		P Hill			
Wedges		P Hill	4	0.712	2.846
Schmidt Plate		P Hill	1	1.423	1.423
Primary Mirror		P Hill	1	1.688	1.688
Fold Mirror		P Hill	1	0.290	0.290
HAM Mirror		P Hill	1	0.031	0.031
Summed Mass					6.278
Fiber Bundle					
Fibers		P Hill	144	0.001	0.145
Summed Mass					0.145
Spectrometer					
L1		P Hill	144	0.009	1.233
Bandpass Filter		P Hill	144	0.003	0.467
L2		P Hill	144	0.009	1.233
Summed Mass					2.932
				Total	9.354

Use or disclosure of this data is subject to the restriction on the title page of this document

Optics Mass Estimate - OCE3

Component Name	Flight Quantity	Unit Mass CBE kg	Unit Assembly Mass kg	TRL
Telescope Options				
Depolarizer Wedges	4	**0.712**	**2.846**	6
Schmidt Plate	1	**1.423**	**1.423**	6
Primary Mirror	1	**1.688**	**1.688**	6
Fold Mirror	1	**0.290**	**0.290**	6
HAM Mirror	1	**0.031**	**0.031**	6
Summed Mass			**6.278**	
Image Slicer	1	**0.003**	**0.003**	6
Summed Mass			**0.003**	
Fiber Bundle				
Fibers	69	**0.001**	**0.069**	6
Ball Lenses	6	**0.001**	**0.006**	
Bandpass Filters	69	**0.001**	**0.069**	
Summed Mass			**0.144**	
Spectrometer				
250m Channel				
L1	1	**0.210**	**0.210**	6
L2	1	**0.265**	**0.265**	6
L3	1	**0.182**	**0.182**	6
Prism	1	**0.700**	**0.700**	6
L4	1	**0.071**	**0.071**	6
L5	1	**0.235**	**0.235**	6
L6	1	**0.296**	**0.296**	6
L7	1	**0.064**	**0.064**	6
Summed Mass			**2.023**	
1km Channel - BLUE				
L1	1	**0.113**	**0.113**	6
L2	1	**0.117**	**0.117**	6
Grating	1	**0.055**	**0.055**	6
L3	1	**0.258**	**0.258**	6
L4	1	**0.293**	**0.293**	6
L5	1	**0.140**	**0.140**	6
Summed Mass			**0.976**	
Dichroic	1	**0.055**	**0.055**	6
Summed Mass			**0.055**	
1km Channel - RED				
Grating	1	**0.055**	**0.055**	6
L3	1	**0.212**	**0.212**	6
L4	1	**0.264**	**0.264**	6
L5	1	**0.156**	**0.156**	6
Summed Mass			**0.687**	
		Total	**10.166**	

Use or disclosure of this data is subject to the restriction on the title page of this document

Concerns

- The image slicer required to split the image into multiple spectral channels will be a challenge and may present stray light risks.
- The design of the low resolution fiber spectrometer channels may not have adequate performance (throughput).
- The performance of the depolarizer may lead to either undesirable cross talk (multiple images / “blur”) or instrument polarizance (trade off). It is difficult to design a depolarizer that operates over such a large bandpass.
- The location of the depolarizer requires it to be very heavy. Ideally the depolarizer would be moved such that it can be smaller and lighter.

Use or disclosure of this data is subject to the restriction on the title page of this document

Next Steps

- Design and evaluate the performance of the image slicer.
- Evaluate the throughput of the “integrating sphere” approach to the low resolution fiber spectrometer channels.
- Optimize the depolarizer geometry to minimize both cross talk and instrument polarizance.

Use or disclosure of this data is subject to the restriction on the title page of this document